Southwire™

TOOLS & EQUIPMENT

southwiretools.com

1-855-SW-T00LS
Toll Free Technical Help
Assistance technique gratuite
Línea de Ayuda Técnica Gratuita

Product distributed by/Produit distribué par
Southwire Company, LLC.
One Southwire Drive, Carrollton, GA 30119

©2016 Southwire Company, LLC.
All rights reserved. Tous droits réservés.

04/17 (M6K-M)

Southwire™

TOOLS & EQUIPMENT

OPERATING and MAINTENANCE INSTRUCTIONS
MAXIS® 6K Puller
(M6K-M)

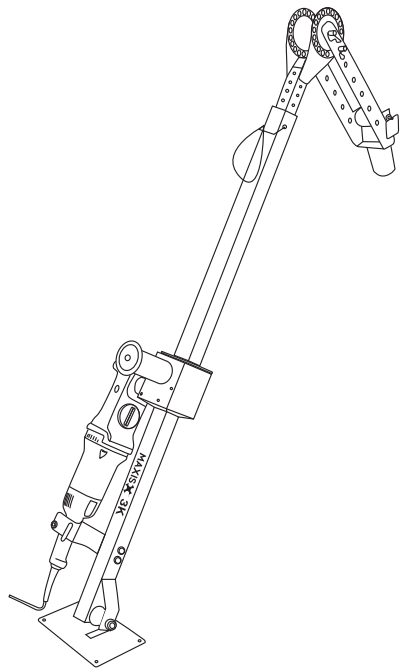

READ AND UNDERSTAND ALL OF THE INSTRUCTIONS AND SAFETY INFORMATION IN THIS MANUAL BEFORE OPERATING OR SERVICING THIS TOOL

TABLE OF CONTENTS

Important Safety Information.....2 - 5
Description of Operation.....6
Identification.....6
Setup and Operation.....7 - 17
Troubleshooting and Maintenance.....17
Warranty.....19 - 20

SAFETY FIRST

Safety is essential in the use and maintenance of Southwire™ Contractor Equipment. This instruction manual and any markings on the tool provide information for avoiding hazards and unsafe practices related to the use of this tool. Observe all of the safety information provided.

SAFETY ALERT SYMBOLS

These symbols are used to call attention to hazards or unsafe practices related that could result in injury or property damage. The three safety words defined below indicate the severity of the hazard. The message after the signal word provides information for preventing or avoiding the hazard.

DANGER - immediate hazards that if not avoided WILL result in severe injury or death

WARNING - Hazards that if not avoided COULD result in severe injury or death

CAUTION - Hazards or unsafe practices that, if not avoided MAY result in severe injury or death

WARNING

- Read and understand all instructions and safety information in this manual before operating or servicing this tool.
- Read the instruction manual supplied with your drill before operating the Maxis® 6K puller.
- Failure to observe these warnings could result in severe injury or death.

FAILURE TO OBSERVE THESE WARNINGS COULD RESULT IN SEVERE INJURY OR DEATH.

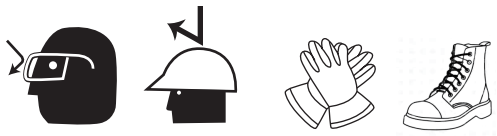

WARNING - Personal Safety Hazards

- Only qualified persons should operate the MAXIS® 6K
- Wear eye protection, hard hat, cut resistant gloves and safety toe shoes when using this tool.
- Do not use tool while tired or under the influence of drugs, alcohol, or medication.
- Keep body parts and loose clothing away from moving parts.
- Always follow operating procedures.
- Avoid accidental starting. Make sure switch is off before plugging in motor.

FAILURE TO OBSERVE THESE WARNINGS COULD RESULT IN SEVERE INJURY OR DEATH.

⚠DANGER: Electrical Shock Hazards.

- Do not expose power tools to rain or wet conditions. Water entering a power tool can increase the risk of electric shock.
- Plug into a (GFCI) ground fault interrupted circuit outlet only.
- Use a 10/3 20 Amp 120 Volt extension cord no more than 100 feet in length.
- Maintain proper care of power cords. Do not use the cord to carry the tool or pull the plug from an outlet. Replace damaged cords immediately. Damaged cords can increase the risk of electric shock.
- Do not use this tool near live circuits. Shut off and lock out power when working near existing circuits.

FAILURE TO OBSERVE THESE WARNINGS COULD RESULT IN SEVERE INJURY OR DEATH.

⚠ WARNING: Entanglement Hazard

- Do not operate this tool while wearing loose-fitting clothing. Retain long hair.
- Keep hands away from the puller's capstan. Rope at the capstan can crush a hand.
- Turn off drill when wrapping rope on capstan.

FAILURE TO OBSERVE THESE WARNINGS CAN RESULT IN SEVERE INJURY OR DEATH.

⚠ WARNING: Tipping

- Use the appropriate size adaptor with conduit. Lock adaptor under conduit nut. Disassemble when not in use.

FAILURE TO OBSERVE THIS PRECAUTION CAN RESULT IN INJURY OR PROPERTY DAMAGE.

⚠ WARNING: Tool Use Hazards

- Use this tool for the manufacturer`s intended purpose only. Use other than that which is described in this manual can result in injury or property damage.
- Do not use nylon or polypropylene rope, extreme force can be stored when rope stretches.

IMPORTANT SAFETY INFORMATION

- Inspect all aspects of the pull to ensure safety.
- Only qualified personnel should use pulling equipment.
- Do not use the cable puller as hoist or winch. The cable puller cannot lower a load. The load may fall and cause serious injury or death.

⚠CAUTION:

- Read and understand all of the instructions and safety information in this manual before operating or servicing this tool.

FAILURE TO OBSERVE THESE CAUTIONS CAN RESULT IN INJURY OR PROPERTY DAMAGE

⚠CAUTION:

- Do not use if any parts are damaged as this can cause an unsafe condition and lead to tool malfunction or failure.
- If tool is in disrepair, **DO NOT USE.** Have tool serviced at an Authorized Southwire Repair Center.

FAILURE TO OBSERVE THESE CAUTIONS CAN RESULT IN INJURY OR PROPERTY DAMAGE

DESCRIPTION OF OPERATION

The Maxis® 6K is a a cable puller intended to pull medium to large wire (up to 750MCM) wire through conduit. It sets up in only minutes, operates at both 12 feet per minute in low and 44 feet per minute in high and will pull up to 6,000 pounds without being bolted to the ground. The Maxis® 6K requires only one person to set up and operate.

IDENTIFICATION

1. Conduit Adaptors (size 2, 2-1/2, 3, 3-1/2, 4 inch)
2. Adaptor Housing bracket
3. Adaptor bolt 5/8 inch
4. Front Roller
5. Front Extension
6. Main Roller
7. Main Roller Hitch Pin (4-1/2 x 1/2)
8. Front Extension Hitch pin (4-1/2 x 1/2)
9. Adjustable Outer Sleeve
10. Clevis Pin
11. Capstan
12. Drill Chuck Adaptor
13. Gear Box
14. Switch Lever (on/off)
15. Drill Mount
16. Lower Fixed Leg
17. Lower Pulley
18. Base Plate
19. Base Plate Pin
20. Drill Mount Bolt

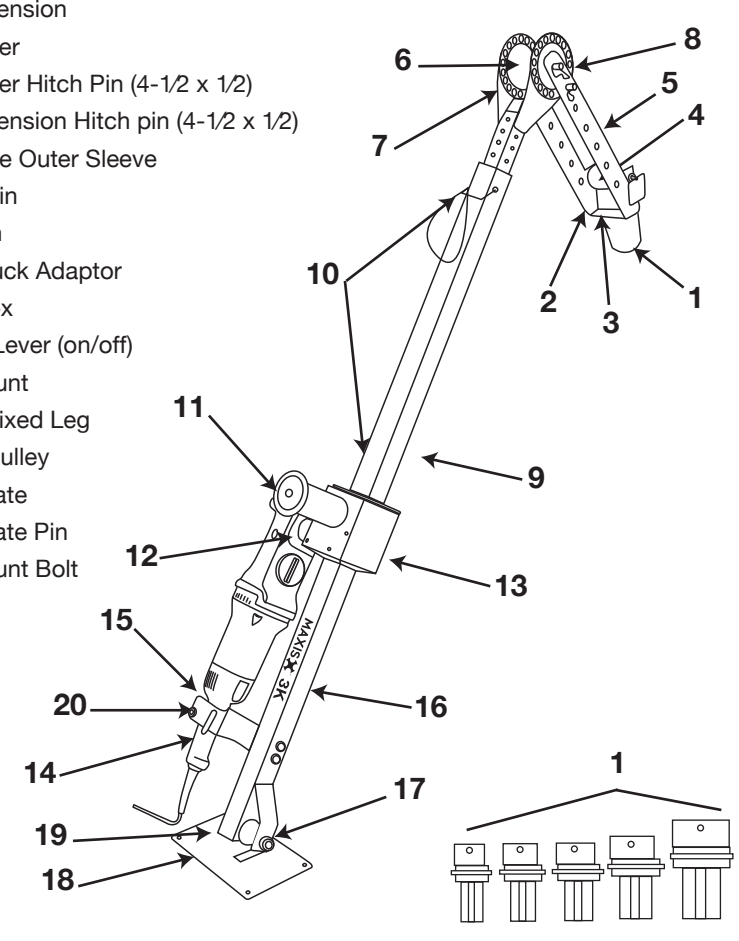

PULLER CART SETUP

Wheel Assembly Includes:
(2) Cotter Pins
(4) Washers
(2) Wheels
(1) Axle

Main Assembly Includes:
(1) Cart
(2) Cotter Pins
(1) Attachable Accessory Bag

Dimensions
L17.5” x W21” x H50”
Total weight 35 lbs.
(w/o cable puller, motor or conduit adapters)

Description
Stock #- 56-82-96-01
Model #- PC100
Aa

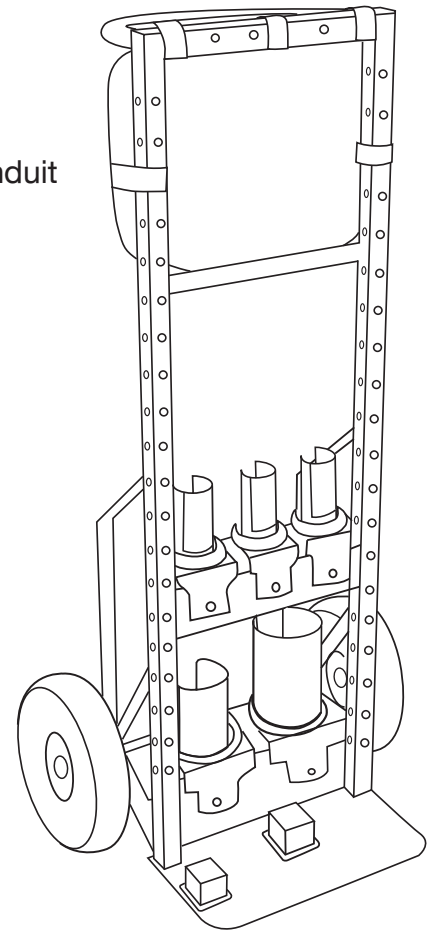

WHEEL ASSEMBLY

1. Slide the axle through the wheel slots on the back of the Pull Cart (Fig 1).
2. Place one washer on the axle between the cart frame and the wheel, then slide the wheel onto the axel followed by a second washer (Fig 2-3).
3. Use a cotter pin (butterfly pin) to hold the wheel in place (Fig 4). Bend the cotter pin to lock the assembly (Fig 5) Note: You may need to use pliers to hold the pin in place while bending the pin with needle nose (Fig 4a).
4. Repeat steps 2 and 3 on the opposite side of the cart for the second wheel.

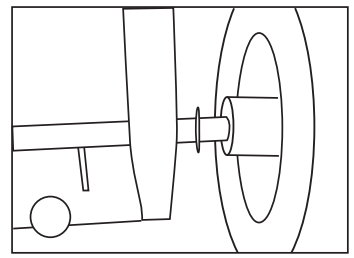

Fig 1

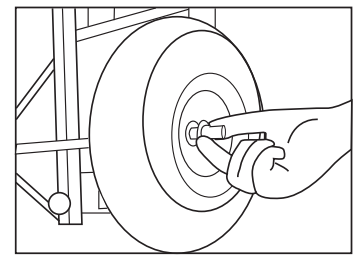

Fig 2

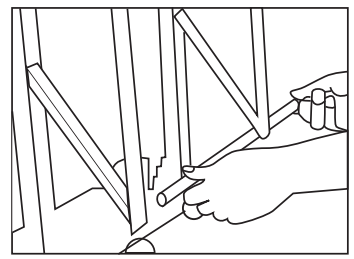

Fig 3

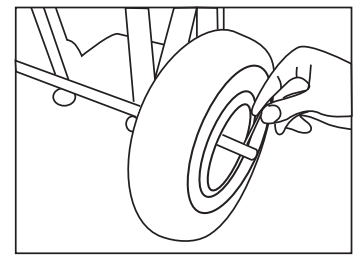

Fig 4

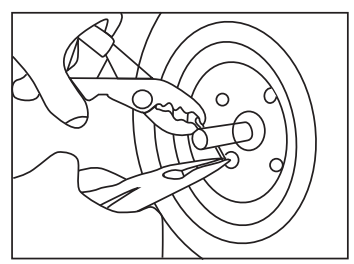

Fig 5

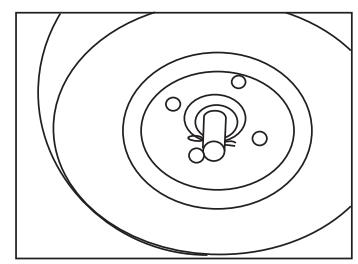

Fig 6

ATTACHING THE TOOL BAG

1. Separate the top three strips of hook and loop from each other.
2. Rewrap them tightly around the top bar main frame behind the handle of the cart (Fig 1).
3. Separate both side strips of hook and loop from each other.
4. Rewrap each side tightly around the side mainframe of the Cart (Fig 2).

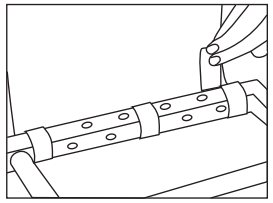
Fig 1

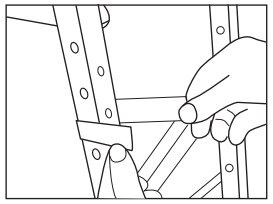
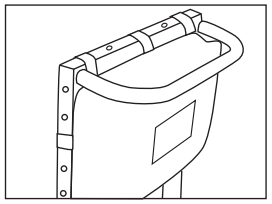
Fig 2

ATTACHING THE PULLER

1. Once the wheel assembly has been completed, be sure that your Maxis® 3K or 6K is disassembled into two parts (Fig 1).
2. Insert the gearbox portion if the puller into the sleeve mounted in the middle of the carts carrying plate with the base plate up (Fig 2).
3. Push the pullers base plate back so the carts anchor shaft protrudes from the pullers base plate.
4. Install cotter pin through anchor shaft to lock the puller gearbox section in place (Fig 3). Note: Puller cart anchor shaft will be positioned on the top right of the support bar for the Maxis® 3K and on the right of the main frame for the Maxis® 6K (Fig 3a).
5. Take the pullers front arm extension and slide the sleeve onto the post on the left side of the carts carry plate (Fig 4).
6. Using the pullers hitch pin, slide pin through one of the pullers adjustment holes and the mounting hole located on the left side of the cart (Fig 5-6). Note: Puller cart extension hole for the Maxis® 3K is located approximately 9 inches from the top and 6 inches from the top on the Maxis® 6K (Fig 7).

7. Lock the pullers front arm extension into place by inserting the cotter pin into the hitch pin (Fig 8).

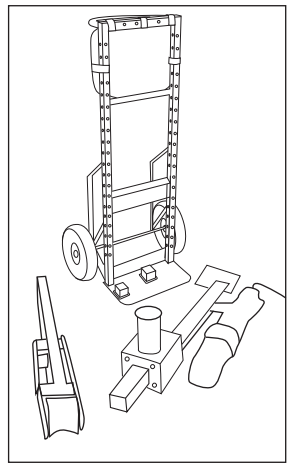
Fig 1

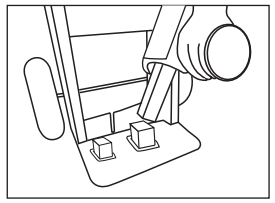
Fig 2

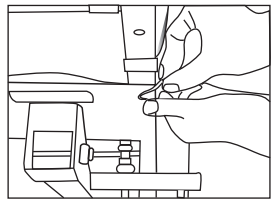
Fig 3

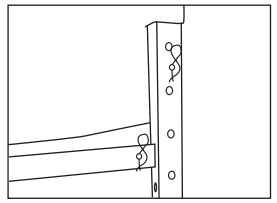
Fig 3a

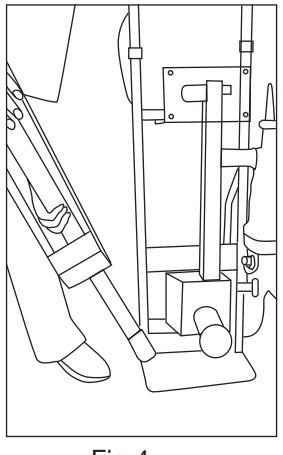
Fig 4

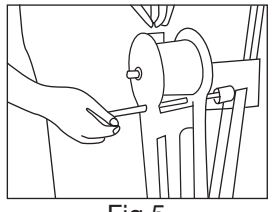
Fig 5

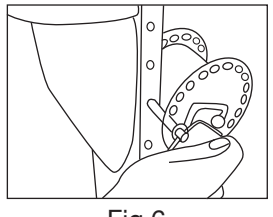
Fig 6

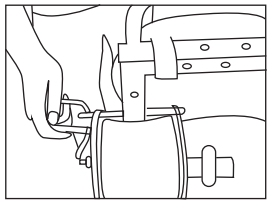
Fig 7

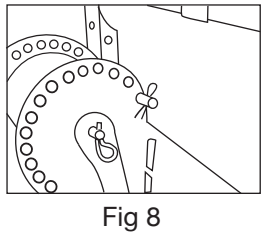
Fig 8

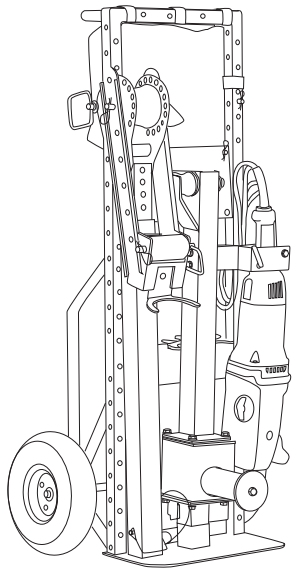

CONDUIT ADAPTORS

1. To attach conduit adaptors to the cart, slide the adaptor plate into the mounting slot on the back of the cart. Pull spring locking fasteners for easy storage and removal of conduit adaptors. Compatible with both Maxis® 3K and Maxis® 6K. Be sure to store 1” and 1-1/2” conduit adaptors in the tool bag when utilizing the Maxis® 3K adaptors.

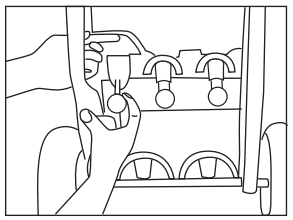
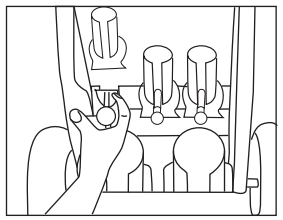
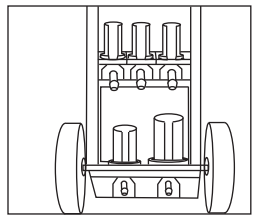

PUTTING PULLER TOGETHER

1. Always wear gloves, eye protection, hard hats and safety toed shoes when working with pullers.
2. Remove gearbox assembly from cart and lay on the ground.
3. Lay front extension assembly face down; remove clevis pins on extension assembly.
4. Slide 2” outer sleeve over gearbox assembly and reinstall clevis pin (Fig 1).
5. Slide drill in place over drill chuck adaptor and tighten all three holes of the chuck, (if this is not done the drill may slip on the shaft) Do not tighten just one chuck hole (Fig 2-3).
6. Secure drill in place with drill mount bolt (Fig 4).
7. Maxis® 6K was designed to be used with the Milwaukee Super Hawg® drill.
8. Set the motor to the desired speed, H or L (Fig 5).

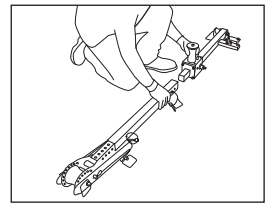
Fig 1

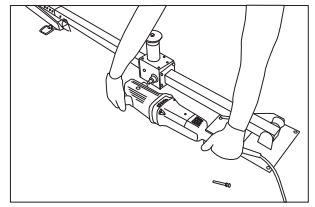
Fig 2

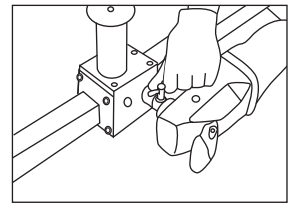
Fig 3

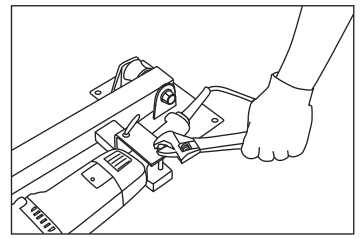
Fig 4

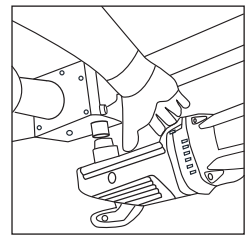
Fig 5

ATTACHING THE CONDUIT ADAPTORS

Option 1

1. Remove 6-1⁄2 x 1⁄2” hitch pin on front extension (not the pin with the roller), swing front extension forward and install conduit adapter (size 2, 2-1/2, 3, 3-1/2 and 4 inch) (Fig 6).
2. Secure with 5/8” bolt to hold in place (Fig 7).
3. For tight pulling situations, the bottom half of the adapter can be removed by unscrewing the two side hex screws.

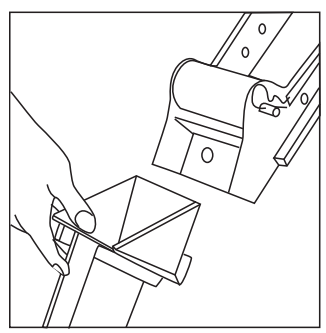
Fig 6

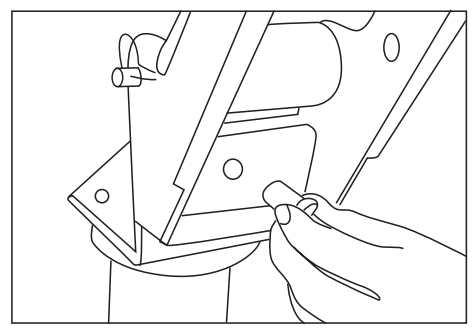
Fig 7

Option 2
1. Place desired conduit adaptor into conduit (Fig 8).
2. Slide front end extension onto adaptor (Fig 9).
3. Secure with 5/8" bolt to hold into place (Fig 10).

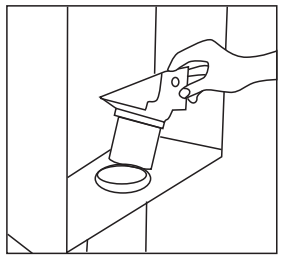

Fig 8

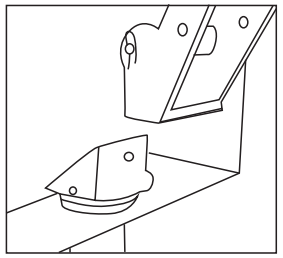

Fig 9

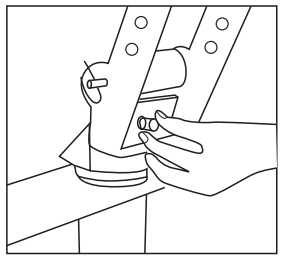

Fig 10

UNDERGROUND PULLS

1. Assemble puller and attach correct size conduit adaptor.
2. Pivot Front Extension assembly to desired angle and reinsert pin (Fig 11).
3. Lift front end and place conduit adapter into conduit. Always make sure the conduit adaptor sits flush around the conduit you are pulling through (Fig 12).
4. Replace pin front assembly to lock all parts tight. (This must be pinned for the puller to operate properly and safely).
5. **WARNING: Do not stand in line with the rope being pulled (stand to the side of the drill) to avoid injury if rope breaks.**
6. Use Southwire NoLUBE®SIMpull® cables or add proper lubricant for all your pulling jobs.
7. Loosely wrap rope around the capstan in a clockwise direction from the inside out. Start the electric drill by rotating the Maxis® 6K's switch lever. Pull on the rope to produce some tension. The rope will begin to advance.
8. Maintain tension on the rope.

- The rope will slip on the capstan during normal operation. Keep the rope moving so that the capstan does not contact one spot on the rope for more than a few seconds. Otherwise, the rope will heat up quickly and it may break.
- Do not exceed about 45 N (10lb) of tension on the rope. If the pull becomes difficult, stop the pull, add another wrap or two of rope to the capstan. **WARNING: Do not add wraps to Capstan with motor running, could result in Injury or death.**
- If excessive force becomes necessary, stop the pull and inspect the setup.
- When the cable or wire comes over the roller, switch the electric drill OFF.

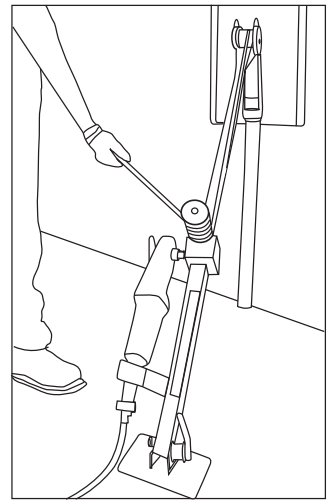

Underground Pull

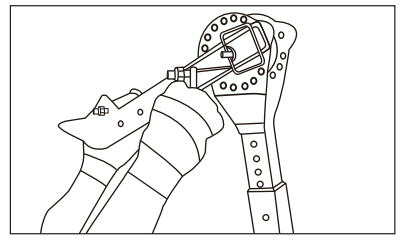

Fig 11

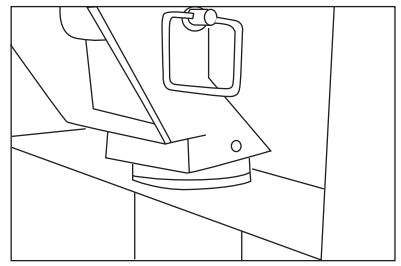

Fig 12

OVERHEAD PULLS

1. Assemble puller and attach correct size conduit adaptor.
2. To convert to overhead pulls, remove front hitch pin on front extension and swing front extension straight out and re-pin (Fig 13).
3. Remove upper pin from adjustable outer sleeve and front assembly and turn front assembly 180° and re-pin (Fig 14)
4. Shorten the length of the adjustable outer sleeve then extend arm to fit into conduit. Always make sure conduit and adaptor sits flush around the conduit you are pulling through. Thread rope under front roller and over main roller (Fig 15).
5. Pin Adjustable Outer Sleeve (Fig 16).
6. **WARNING: Do not stand in line with the rope being pulled (stand to the side of the drill) to avoid injury if rope breaks.**
7. Use Southwire NoLUBE® SIMpull® cables or add proper lubricant for all your pulling jobs.
8. Loosely wrap rope around the capstan in a clockwise direction from the inside out. Start the electric drill by rotating the Maxis® 6K's switch lever. Pull on the rope to produce some tension. The rope will begin to advance.
9. Maintain tension on the rope.
   - The rope will slip on the capstan during normal operation. Keep the rope moving so that the capstan does not contact one spot on the rope for more than a few seconds. Otherwise, the rope will heat up quickly and it may break.
   - When pulling on the rope, do not exceed about 45 N (10lb) of tension on the rope. If the pull becomes difficult, stop the pull, add another wrap or two of rope to the capstan. **WARNING: Do not add wraps to Capstan with motor running, could result in Injury or death.**
   - If excessive force becomes necessary, stop the pull and inspect the setup.
   - When the cable or wire comes over the roller, switch the electric drill OFF.

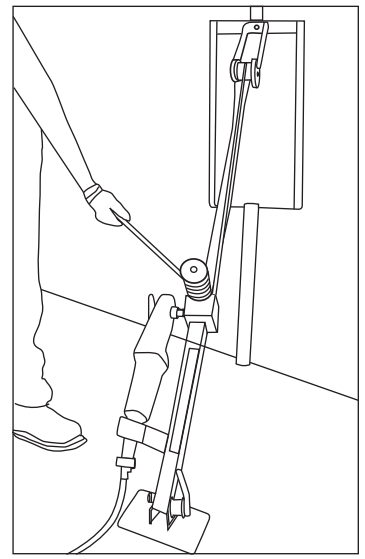

Underhead Pull

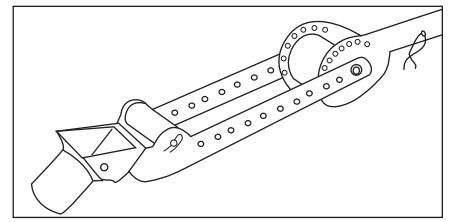

Fig 13

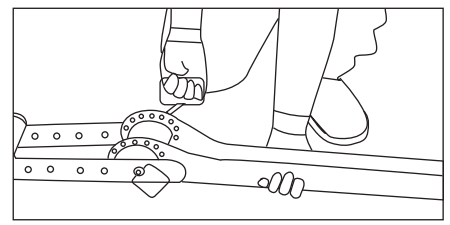

Fig 14

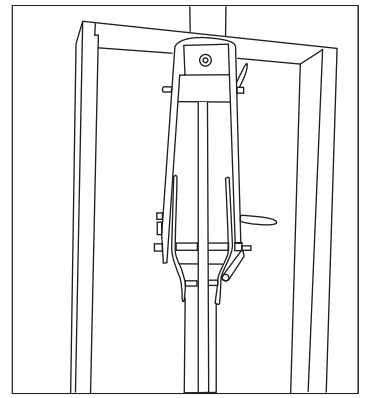

Fig 15

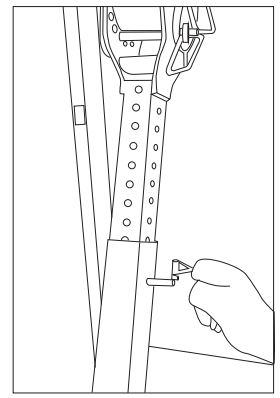

Fig 16

SET UP AND OPERATION

PULLING OUT EXTRA WIRE

1. When wire appears out of conduit and down pullers shaft, turn off dill motor.
2. Unwrap rope from capstan and extend rope around Lower Pulley then back up to capstan (Fig 17).
3. Wrap rope around the capstan in a clockwise direction from the inside out.
4. Continue wire pull until desired length is pulled out or until wire reaches lower pulley.

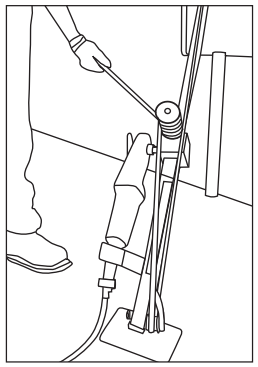

Fig 17

TROUBLESHOOTING

1. Make sure capstan rotates in a clockwise rotation. If rotating in a counter clock rotation the drill motor is in reverse, turn off drill and switch the motor to the forward rotation.
2. Tighten all three chuck holes when attaching drill to chuck adaptor. Check drill chuck for tightness before every pull.

MAINTENANCE

- Gearbox is filled with high temperature lubricating grease. No maintenance is required.
- Drill shaft is equipped with a six sided harden steel extension. If you chuck all three chuck holes you should not have slipping. If for any reason this shaft is worn down or stripped, call your local distributer or Southwire Tools and Equipment for a replacement.

EXPLODED DIAGRAM

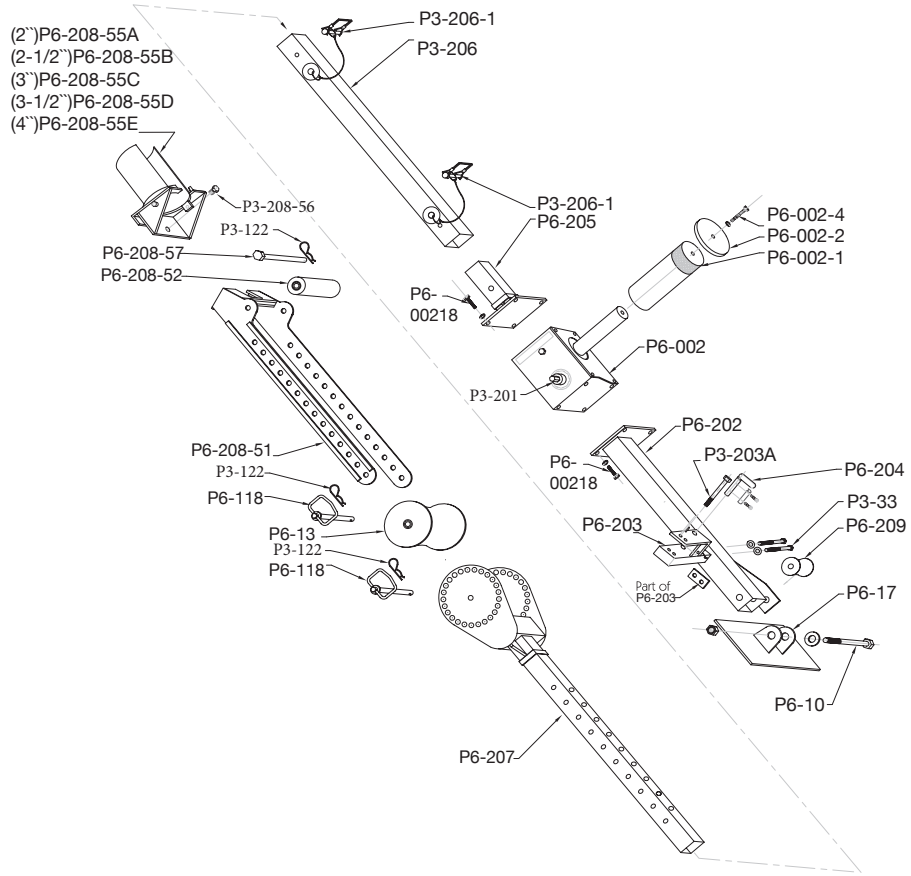

SPECIFICATIONS

- Model# M6K-M
- Stock # 57-64-84-01
- Length (Fully Extended)- 10 Feet
- Length Disassembled- 40 Inches
- Width- 8 Inches
- Weight with Motor – 155lbs
- Pulling Rope Minimum Average Breaking Strength- 18,000lbs
- Pulling Speed Low- 12 fpm (No Load)
- Pulling Speed High- 44 fpm (No Load)
- Recommended Pulling Rope- 5/8 Inch or Larger
- Patent Number – US 6,682,050

WARRANTY ON SOUTHWIRE CONTRACTOR EQUIPMENT

What Does This Warranty Cover?

Five-Year Limited Warranty on Contractor Equipment

Under Southwire's Contractor Equipment 5-Year Limited Warranty, Southwire Company, LLC warrants that all Southwire Contractor Equipment will be free from manufacturer defects for a period of five (5) years from the date of the original end user's purchase. However, electrical components and consumable parts such as ropes, blades, dies, draw studs, grips, are excluded from this 5-Year Limited Warranty and are subject to the One -Year warranty terms. Under this 5-Year Limited Warranty, the following are also excluded and Southwire Company, LLC will have no liability for any of the following: normal wear and tear resulting from product use and damage arising out of misuse, abuse, modification, and improper product maintenance. This warranty also does not cover Southwire Contractor Equipment products that have been modified by any party other than Southwire Company, LLC or its authorized third party designee. This 5-Year Limited Warranty is not transferrable to or enforceable by any person other than the product's original end user.

One-Year Limited Warranty on Electrical Components and Consumable Parts (with 5-Year warranty)

Under Southwire's 1-Year Limited Warranty, Southwire Company, LLC warrants that all electrical components and consumable parts such as ropes, blades, dies, draw studs, grips will be free from manufacturer defects for a period of one-year from the date of the original end user's purchase. Under this 1-Year Limited Warranty, Southwire Company, LLC will have no liability for any of the following: normal wear and tear resulting from product use and damage arising out of misuse, abuse, modification, and improper product maintenance. This warranty also does not cover Southwire electrical components and consumable parts that have been modified by any party other than Southwire Company, LLC or its authorized third party designee. This 1-Year Limited Warranty is not transferrable to or enforceable by any person other than the product's original end user.

Exclusion of Incidental, Consequential, Indirect, Special and Punitive Damages

SOUTHWIRE MAKES NO WARRANTY THAT SOUTHWIRE CONTRACTOR EQUIPMENT PRODUCTS WILL BE MERCHANTABLE OR FIT FOR ANY PARTICULAR PURPOSE. SOUTHWIRE MAKES NO OTHER WARRANTY, EXPRESSED OR IMPLIED, OTHER THAN THE RELEVANT WARRANTY SPECIFICALLY SET FORTH IN THIS WARRANTY SECTION. SOUTHWIRE WILL NOT BE LIABLE FOR ANY INCIDENTAL, CONSEQUENTIAL, INDIRECT, SPECIAL, OR PUNITIVE DAMAGES FOR ANY BREACH OF THIS LIMITED LIFETIME WARRANTY.

Some states do not allow the exclusion or limitation of incidental or consequential damages, so the above limitation or exclusion may not apply to you.

Warranty Claim Information/How Do You Get Service?

For all warranty, customer service, and product return authorizations and inquiries, please contact Southwire's Tools & Assembled Products at:
Southwire Tools & Assembled Products
840 Old Bremen Road
Carrollton, GA, 30117
Phone Number: 1.855.SW.Tools

1. All warranty claims must be approved by Southwire's Tools & Assembled Products Warranty Department prior to return of product. If Southwire determines that a product is defective, Southwire will, at its option, repair or replace defective products or defective product components, free of charge.
2. Upon approval, Southwire will issue a Product Return Authorization Form which will include instructions on how and where to return the product. **The product serial number and the original date of delivery must be set forth on the Product Return Authorization Form.**
3. Southwire will cover standard freight charges (Ground Courier Rate) incurred in connection with products that Southwire ultimately determines to be defective.
4. All defective components and defective products that Southwire replaces under these Warranties will become Southwire's property and will be retained by Southwire.

Repair Your Product When it is Out of Warranty

Southwire is happy to provide information about where a purchaser can send a product for repair at consumers' own expense, please contact 1.855.SW.tools or visit www.southwiretools.com/tools/home.do for more information about servicing for Southwire Products.